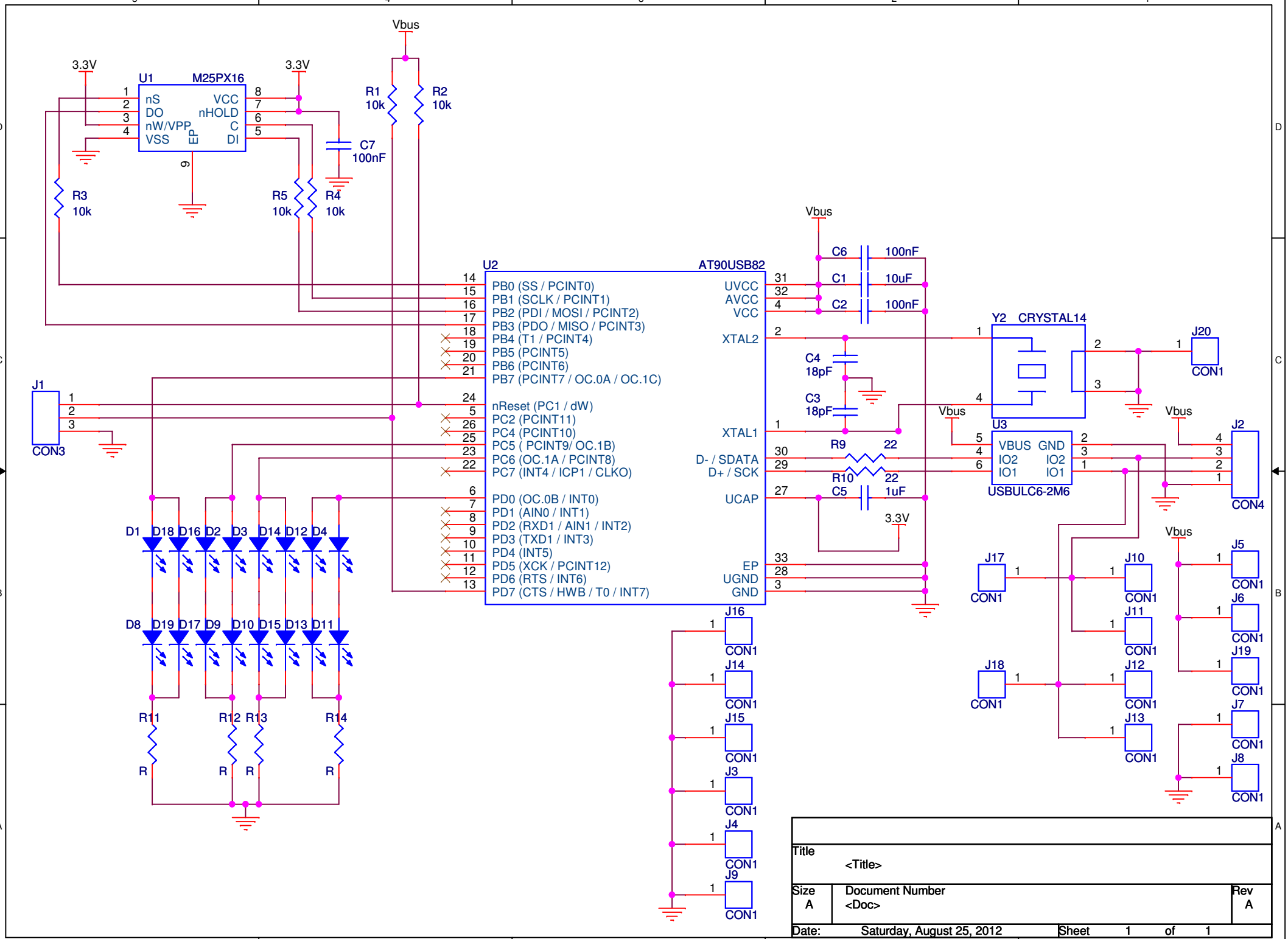
U1 M25PX16
nS
DO
nW/VPP
VSS
VCC
nHOLD
C
DI
EP
3.3V
Vbus
R1 10k
R2 10k
C7 100nF
R3 10k
R5 10k
R4 10k
U2 AT90USB82
PB0 (SS / PCINT0)
PB1 (SCLK / PCINT1)
PB2 (PDI / MOSI / PCINT2)
PB3 (PDO / MISO / PCINT3)
PB4 (T1 / PCINT4)
PB5 (PCINT5)
PB6 (PCINT6)
PB7 (PCINT7 / OC.0A / OC.1C)
nReset (PC1 / dW)
PC2 (PCINT11)
PC4 (PCINT10)
PC5 (PCINT9/ OC.1B)
PC6 (OC.1A / PCINT8)
PC7 (INT4 / ICP1 / CLKO)
PD0 (OC.0B / INT0)
PD1 (AIN0 / INT1)
PD2 (RXD1 / AIN1 / INT2)
PD3 (TXD1 / INT3)
PD4 (INT5)
PD5 (XCK / PCINT12)
PD6 (RTS / INT6)
PD7 (CTS / HWB / T0 / INT7)
UVCC
AVCC
VCC
XTAL2
XTAL1
D- / SDATA
D+ / SCK
UCAP
EP
UGND
GND
C6 100nF
C1 10uF
C2 100nF
C4 18pF
C3 18pF
R9 22
R10 22
C5 1uF
Y2 CRYSTAL14
U3 USBULC6-2M6
VBUS GND
IO2 IO2
IO1 IO1
J1 CON3
J2 CON4
J20 CON1
J16 CON1
J14 CON1
J15 CON1
J3 CON1
J4 CON1
J9 CON1
J17 CON1
J18 CON1
J10 CON1
J11 CON1
J12 CON1
J13 CON1
J5 CON1
J6 CON1
J19 CON1
J7 CON1
J8 CON1
D1 D18 D16 D2 D3 D14 D12 D4
D8 D19 D17 D9 D10 D15 D13 D11
R11 R12 R13 R14
R R R R
Title
<Title>
Size A
Document Number
<Doc>
Rev A
Date: Saturday, August 25, 2012
Sheet 1 of 1